BuzziMilk
product specification sheet

This documents contains technical information about the BuzziMilk Stool, Counter, Bar, Bench, Stool All Wood, Side Table, Side Table Large, Table

BUZZI SPACE

www.buzzi.space

A classic milk stool
This rustic-meets-modern take on the old farmhouse favorite would even make your grandma feel nostalgic. BuzziMilk is a sturdy little stool inspired by elements not usually found in a standard office space.
Its goal? Create a warm and homey feeling at work. BuzziMilk has four legs and an upholstered seat for a softer experience. Select from a variety of wood finishes and make it your own by pairing with one of our many BuzziSpace fabrics. Looking for a pure wood stool? BuzziMilk Stool Allwood is pure simplicity and strong design.

A versatile little table
The BuzziMilk base has inspired the handy BuzziMilk Tables. They can be grouped together to create a series of coffee or side tables, or used independently. Like the BuzziMilk design, multiple size and color options are possible.

Design by Alain Gilles

General

- BuzziMilk Stool, Counter, Bar, Bench, Stool All Wood, Side Table, Side Table Large, Table
- Frame: Wood
- Dry usage
- Assembled

Content

Configurations	3
Components	7
Fabrics	8
Finishes	11
Dimensions	12

Configurations

BuzziMilk Stool

Stool

Frame in Ash Natural, Ash Black Stained,
Ash White Wash, Walnut, Oak,
Ash Lacquered White
Filling in C43170 foam
Seat upholstered in Fabric, Trevira CS+|CS,
Revive 1, Clara 2,Remix 3, Velvet, Hero,
Tonus 4, Memory 2 or Leather Vegetal (Stitching
is required for leather)

Stool: Ø 39 cm H 47,5 cm
Ø 15.35" H 18.70"

Stool: ± 5,9 kg | ± 13.01 lbs
Max. weight capacity: 100 kg | 220.46 lbs

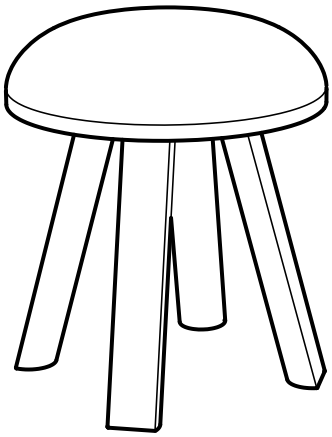

BuzziMilk Counter

Counter

Frame in Ash Natural, Ash Black Stained,
Ash White Wash, Walnut, Oak,
Ash Lacquered White
Foot support in black lacquered metal.
Filling in C43170 foam
Seat upholstered in Fabric, Trevira CS+|CS,
Revive 1, Clara 2, Remix 3, Velvet, Hero,
Tonus 4, Memory 2 or Leather Vegetal (Stitching
is required for leather)

Counter: Ø 39 cm H 68 cm
Ø 15.35" H 26.77"

Counter: ± 7,2 kg | ± 13.01 lbs
Max. weight capacity: 100 kg | 220.46 lbs

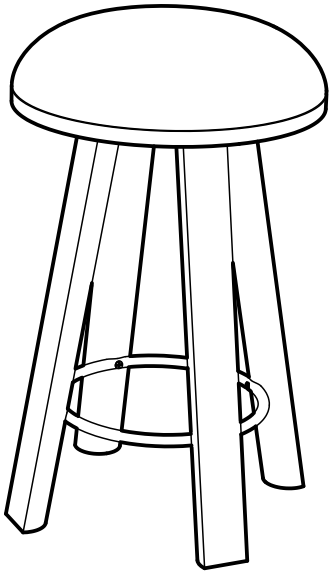

BuzziMilk Bar

Bar

Frame in Ash Natural, Ash Black Stained,
Ash White Wash, Walnut, Oak,
Ash Lacquered White
Foot support in black lacquered metal.
Filling in C43170 foam
Seat upholstered in Fabric, Trevira CS+|CS,
Revive 1, Clara 2, Remix 3, Velvet, Hero,
Tonus 4, Memory 2 or Leather Vegetal (Stitching
is required for leather)

Bar: Ø 39 cm H 78 cm
Ø 15.35″ H 30.71″

Bar: ± 7,8 kg | ± 17.20 lbs
Max. weight capacity: 100 kg | 220.46 lbs

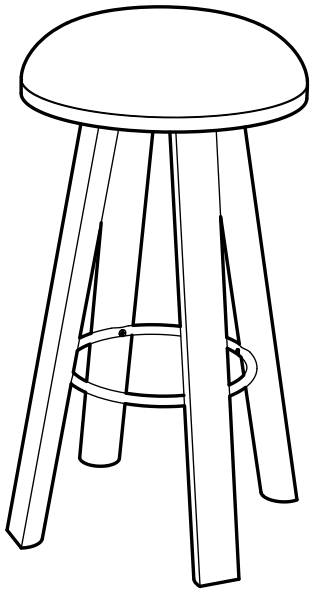

BuzziMilk Bench

Bench

Frame in Ash Natural, Ash Black Stained,
Ash White Wash, Walnut, Oak,
Ash Lacquered White
Filling in C43170 foam
Seat upholstered in Fabric, Trevira CS+|CS,
Revive 1, Clara 2, Remix 3, Velvet, Hero,
Tonus 4, Memory 2

Bench: W 39 cm L 119 cm H 48 cm
W 15.35″ L 46.85″ H 18.89″

Bench: ± 14,6 kg | ± 32.19 lbs
Max. weight capacity: 150 kg | 330.69 lbs

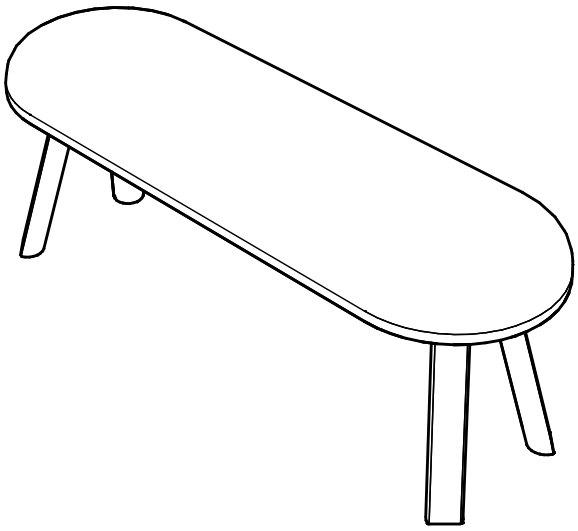

BuzziMilk Stool All Wood

Stool All Wood

Frame in Ash Natural, Ash Black Stained,
Ash White Wash, Walnut, Oak,
Ash Lacquered White

Stool : Ø 39 cm H 43 cm
Ø 15.35" H 16.93"

Stool: ± 6,5 kg | 14.33 lbs
Max. weight capacity: 100 kg | 220.46 lbs

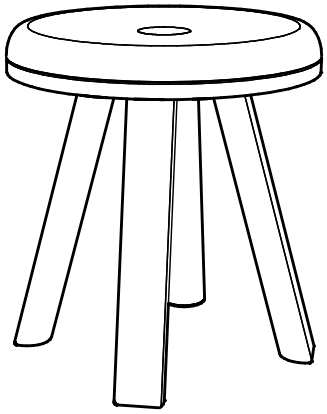

BuzziMilk Side Table

Side Table

Frame in Ash Natural, Ash Black Stained,
Ash White Wash, Walnut, Oak

Ø 39 cm H 39 cm
Ø 15.35″ H 15.35″

Side Table: ± 4,1 kg | ± 9.04 lbs
Max. weight capacity: 100 kg | 220.46 lbs

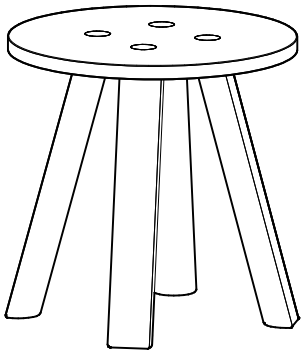

BuzziMilk Side Table Large

Side Table Large

Frame in Ash Natural, Ash Black Stained,
Ash White Wash, Walnut, Oak

W 39 cm L 119 cm H 39,5 cm
W 15.35″ L 46.85″ H 15.55′

Side Table Large : ± 8,1 kg | ± 17.86 lbs
Max. weight capacity: 50 kg | 110.23 lbs

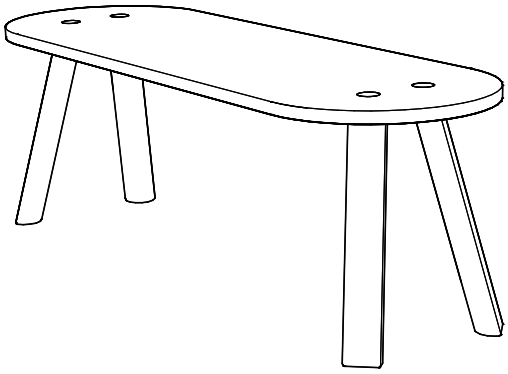

BuzziMilk Table

Table

Frame in Ash Natural, Ash Black Stained,
Ash White Wash, Walnut, Oak

Ø 100 cm H 73,5 cm
Ø 39.37″ H 28.94″

Table: 36 kg | 97.37 lbs

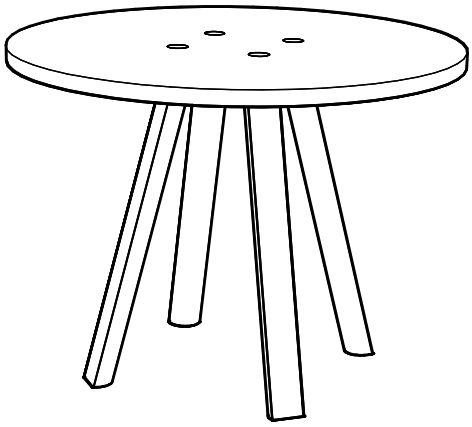

Components

BuzziMilk has Felt or Plastic inserts

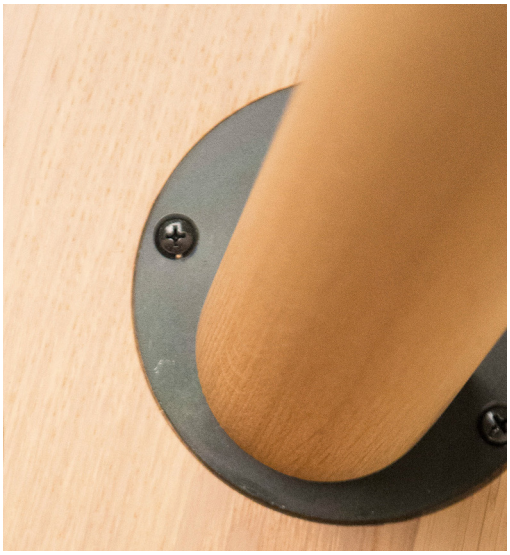

Black powder coated metal connection

Fabrics

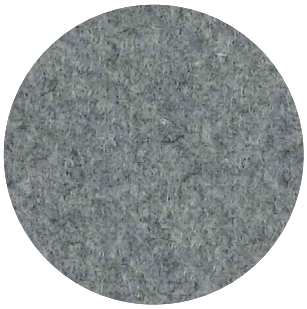

Category A
Composition 70% Recycled Wool, 25% Recycled Polyacryl,
5% Recycled Other Fabrics
Weight 405 g/m² | 11.94 oz/yd²
Abrasion resistance 40.000 Martindale, 50,000 Wyzenbeek
Flammability EU: EN 1021.1/2006 | BS EN 1021.1/2006 (cigarette).
EN 1021.2/2006 | BS EN 1021.2/2006 (match)
USA: CAL TB 117 | ASTM E84 CLASS A
Fastness to light EU: 4 | USA 4
Fastness to rubbing EU: Wet 3-4 | Dry 4-5
Fastness to crocking USA: Wet 5 | Dry 5

Trevira CS+|CS

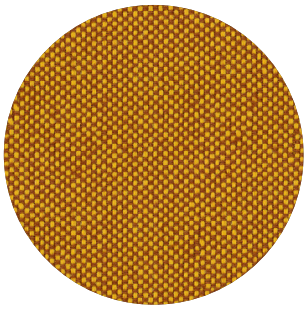

Category A
Weight 420 g/m² | 12.39 oz/yd²
Composition 100% Polyester, Trevira CS
Abrasion resistance 100.000 Martindale, 90,000 Wyzenbeek
Flammability BS 5852 part II: CRIB 5 | BS 7176 Medium Hazard
USA: CAL TB 117 | M1 | B1 | EN 1021/1-2 |C1 |
IMO Res. A652 (16)
Fastness to light EU: 6 | USA 5
Fastness to rubbing EU: Wet 4-5 | Dry 4-5
Fastness to crocking USA: Wet 5 | Dry 5

Revive 1

kvadrat

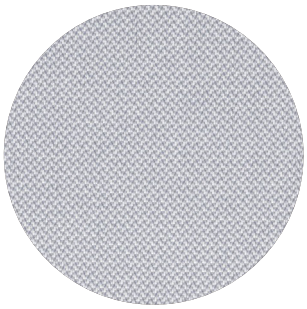

Category A
Composition 100% recycled polyester FR
Weight 430 g/lin.m
Abrasion resistance 60.000 Martindale rubs, EN ISO 12947
Flammability EN 1021-1/2 | DIN 4102 B1 | Önorm B1/Q1
UNI 9175 1IM | US Cal. Tech. Bull. 117
IMO A.652 (16)
Fastness to light Note 5-7, ISO 105-B02
Fastness to rubbing (ISO) dry 5, wet 4-5
Pilling Note 4-5, EN ISO 12945

Velvet

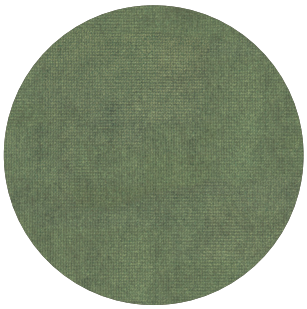

Category B
Composition 100% PES
Weight 375 g/m² | 11.06 oz/yd²
Abrasion resistance > 100.000 Martindale
Fastness to light EU: 4-5
Fastness to rubbing EU: Wet 4 | Dry 4-5
Pilling EU: 4-5

Clara 2

kvadrat

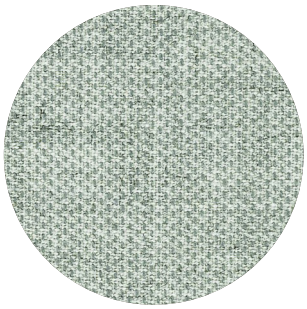

Category B
Composition 92% new wool, 8% nylon
Weight 400 g/lin.m
Abrasion resistance 80.000 Martindale rubs, EN ISO 12947
Flammability EN 1021-1/2 | BS 5852, ignition source 2–3 | DIN 4102 B2
NF D 60 013 | UNI 9175 1IM | US Cal. Tech. Bull. 117, Sec. E
NFPA 260 | IMO A.652(16)
Fastness to light Note 5-7, ISO 105-B02
Fastness to rubbing (ISO) dry 4-5, wet 4
Pilling Note 4, EN ISO 12945

Remix 3

kvadrat

Category B
Composition 90% new wool, 10% nylon
Weight 415 g/lin.m
Abrasion resistance 100.000 Martindale rubs, EN ISO 12947
Flammability EN 1021-1/2 | BS 5852 part 1
Önorm B1/Q1 | NF D 60 013 | UNI 9175, 1IM
AS/NZS 1530.3 | Cal. Tech. Bull. 117-2013
NFPA 260 | IMO FTP Code 2010:Part 8
Fastness to light Note 5-7, ISO 105-B02
Fastness to rubbing (ISO) dry 4-5, wet 4
Pilling Note 4, EN ISO 12945

Hero

kvadrat

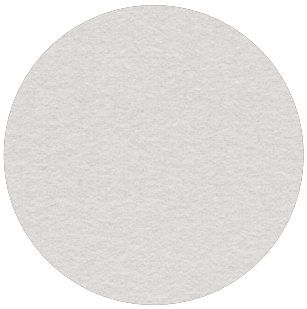

Category C
Composition 96% new wool, 4% nylon
Weight 580 g/lin.m
Abrasion resistance 45.000 Martindale rubs, EN ISO 12947
Flammability EN 1021-1/2 | DIN 4102 B2 | NF D 60 013
UNI 9175 1IM | US Cal. Bull. 117-2013 | NFPA 260
IMO A.652 (16)
Fastness to light Note 5-6, ISO 105-B02
Fastness to rubbing (ISO) dry 4-5, wet 4-5
Pilling Note 3-4, EN ISO 12945

Tonus 4

kvadrat

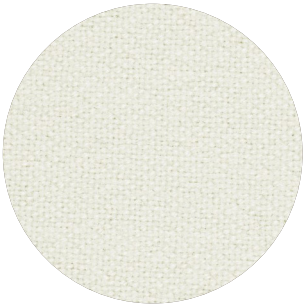

Category D
Composition 90% new wool, 10% Helanca
Weight 665 g/lin.m
Abrasion resistance 100.000 Martindale rubs, EN ISO 12947
Flammability EN 1021-1/2 | BS 5852 part 1 | DIN 4102 B2
Önorm B1/Q1 | NF D 60 013 | UNI 9175 1IM
US Cal. Bull. 117-2013 | NFPA 260 | IMO A.652 (16)
Fastness to light Note 5-7, ISO 105-B02
Fastness to rubbing (ISO) dry 3-5, wet 3-5
Pilling Note 3, EN ISO 12945

Memory 2

kvadrat

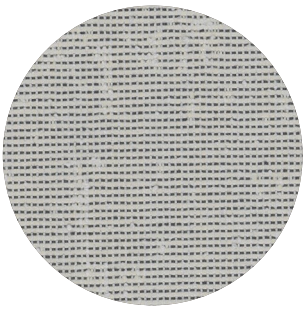

Category E
Composition 100% Trevira CS
Weight 700 g/lin.m
Abrasion resistance
35.000 rubs acc. to the Martindale method, EN ISO 12947
Flammability EN 1021-1/2 | DIN 4102 B1 | Önorm B1/Q1
NF D 60 013 | NF P 92 507 M1 | UNI 9175 1IM
UNI 9177 classe 1 | US Cal. Tech. Bull. 117
IMO A.652 (16)
Fastness to light Note 5-8, ISO 105-B02
Fastness to rubbing (ISO) dry 4-5, wet 4-5
Pilling Note 4, EN ISO 12945

Leather Vegetal

Raw material Scandinavian Bullhides
Surface Pure Aniline
Flammability EU: EN 1021.1 - BS5852 PART 1 (cigarette)
EN 1021.2 - BS5852 PART 1 (match)
USA: CAL TB 117
Fastness to light EU: 3 Blue Scale (72h exposition)
Fastness to rubbing EU: Wet: 20 cycles/3 | Dry: 50 cycles/3
Sweat: 20 cycles/3
Strenght Tear resistance: >20N or 10N/mm thickness
Tensile: >20N/mmq
Elongation: 40-70%

Finishes

Wood

for Base and Tabletop

Ash Natural

Ash Black Stained

Ash White Wash

Walnut

Oak

Ash Lacquered White*

* Not available for Side Table, Side Table Large, Table

Dimensions

Stool

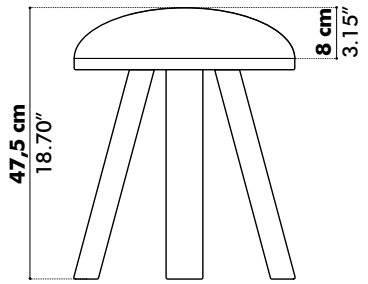

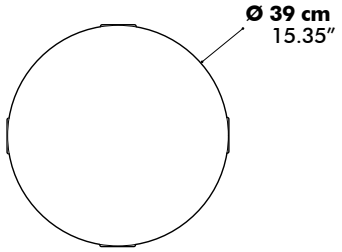

Counter

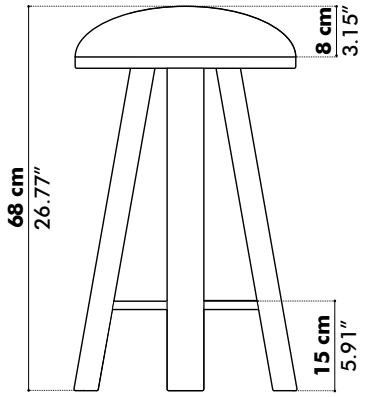

Bar

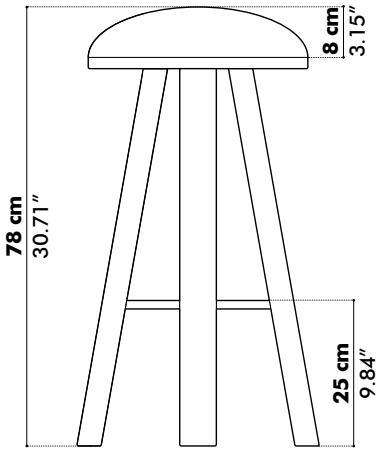

Bench

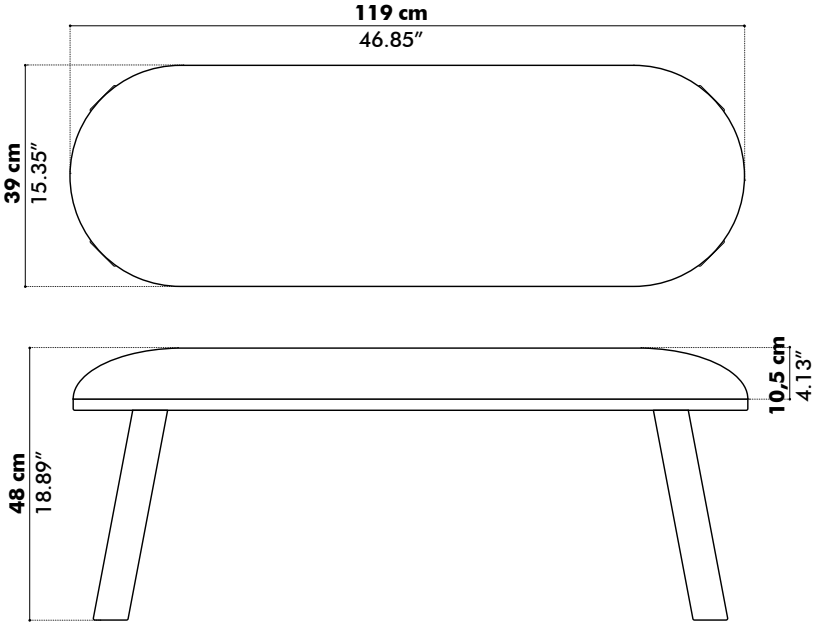

Stool All Wood

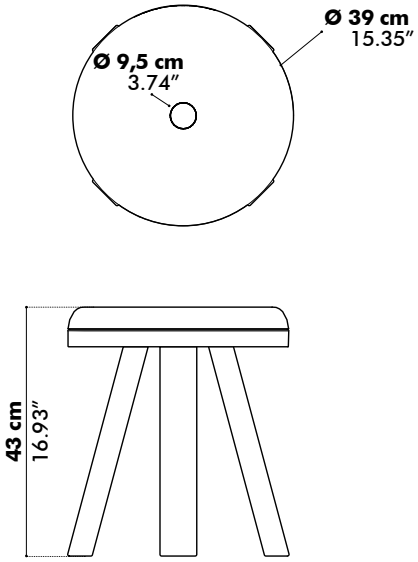

Side Table

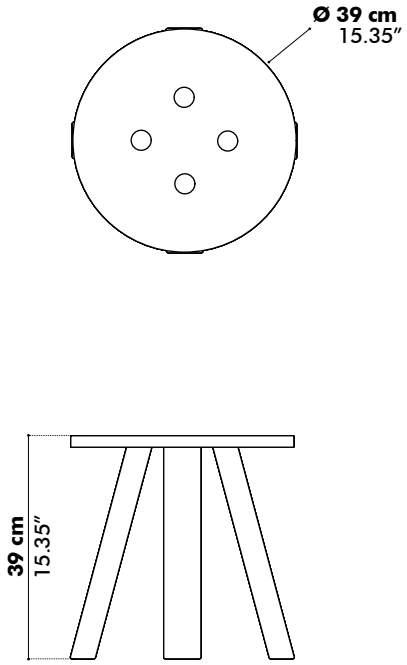

Side Table Large

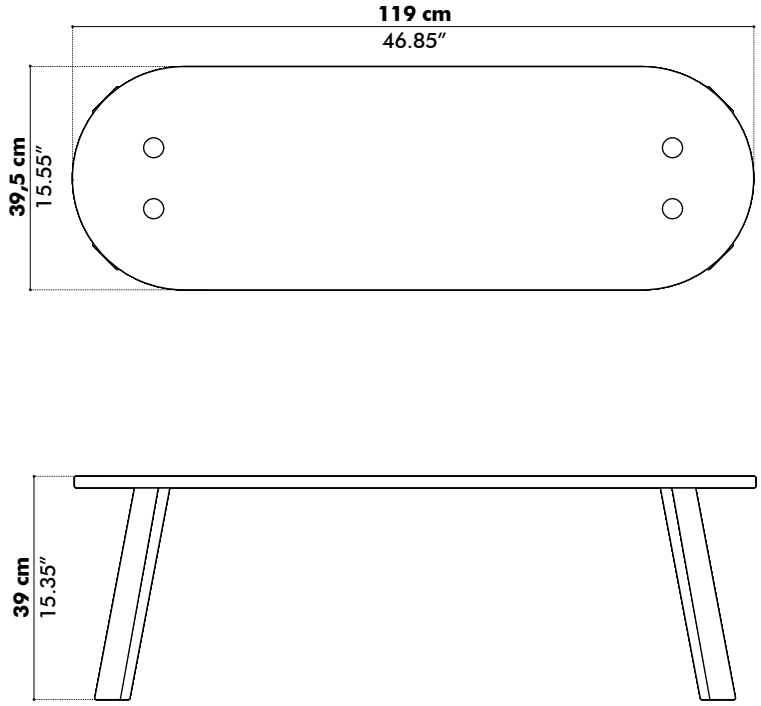
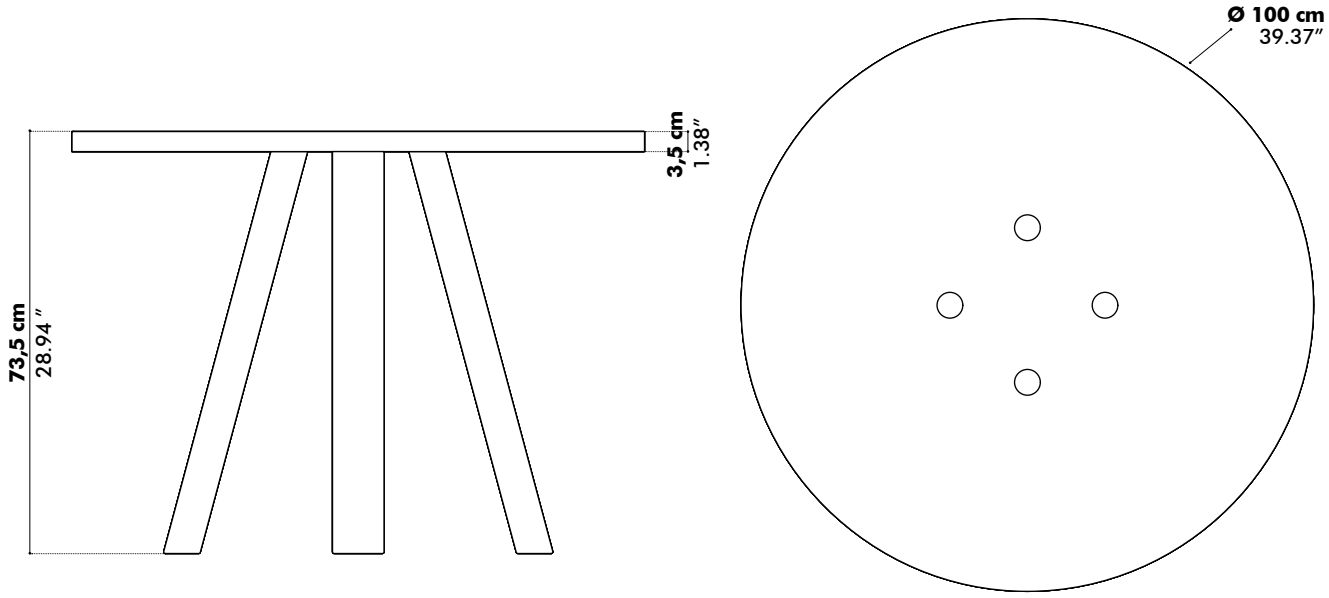
Table